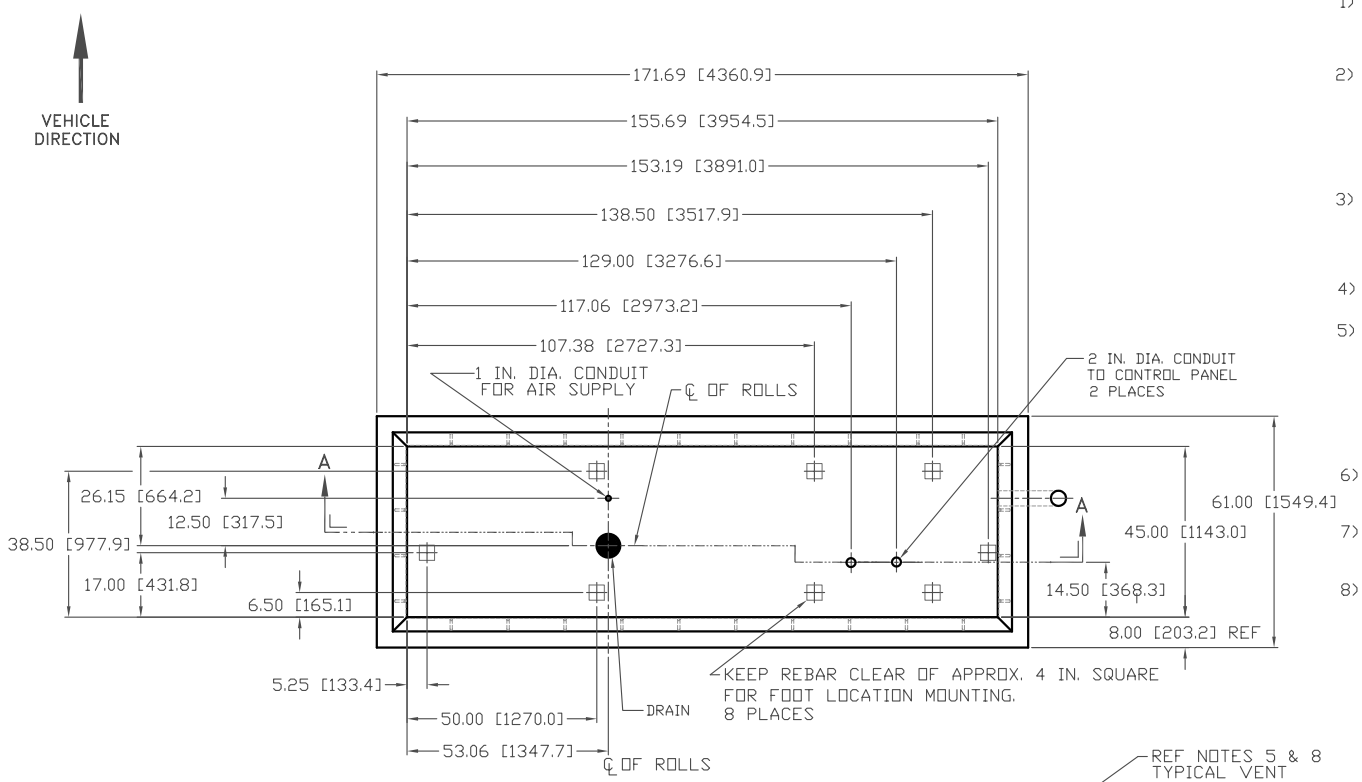

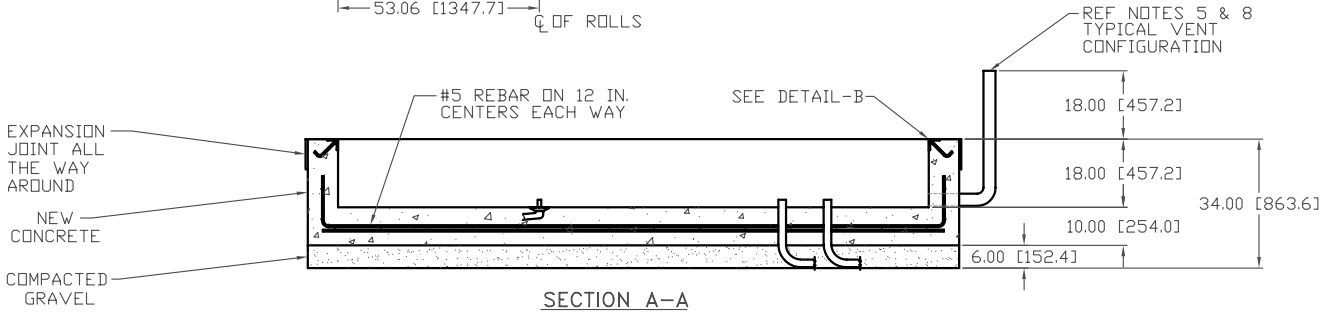

SECTION A–A

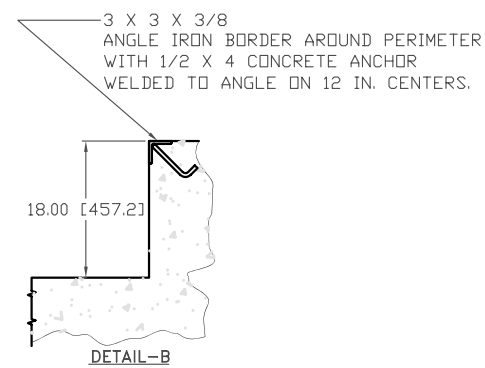

DETAIL-B

NOTES:

1) AN INTEGERAL POUR OF THIS PIT IS RECOMMENDED. IF THIS IS NOT POSSIBLE THEN COMPLETE FLOOR (171-11/16 X 61) MUST BE POURED WITH THE WALLS PINNED ON TOP.

2) THE INSTALLER OF THIS DYNAMOMETER PIT ACCEPTS FULL RESPONSIBILITY FOR ADHERING TO ALL LOCAL, STATE AND FEDERAL CONSTRUCTION CODES. IF ANY OF THE INFORMATION OR IDEAS DEPICTED IN THIS DRAWING DO NOT ADHERE TO THESE CODES, MUSTANG DYNAMOMETER MUST BE NOTIFIED IN WRITING OF CODE VIOLATIONS.

3) COMPRESSIVE STRENGTH OF CONCRETE IS NOT TO BE LESS THAN 3000 PSI AFTER 27 DAYS OF CURE TIME. THE DYNAMOMETER SHOULD NOT BE INSTALLED AND ANCHORED UNTIL AFTER THE CONCRETE IS FULLY CURED.

4) ALL CONDUIT RUNS SHOULD TERMINATE AT CONTROL BOX.

5) PIT VENT REQUIREMENT:
MUST BE ACCORDING TO NATIONAL ELECTRIC CODE. PIT MUST BE VENTED TO SOME POINT OUTSIDE OF PIT AND AT A POINT HIGHER THAN 18" ABOVE THE GRADE LEVEL (SHOP FLOOR). FAN (NOT SUPPLIED) SHOULD CONSTANTLY REMOVE AIR FROM THE PIT AT A RATE OF SIX AIR CHANGES PER HOUR FROM THE BOTTOM OF THE PIT FLOOR.

6) WALL THICKNESS IS FOR REF. ONLY. THE WALLS SHOULD BE INSTALLED ACCORDING TO LOCAL CODES.

7) ALL DIMENSIONS ARE IN INCHES. TOLERANCES FOR ALL DIMENSIONS TO BE +.13/-.00

8) LOCATION OF 4" VENT PIPE FOR REF ONLY. ACTUAL LOCATION TO BE PROVIDED BY CUSTOMER.

REV	ECN	REVISION	BY	DATE
A	864	RELEASE	TEM	12MAR01

THIS DOCUMENT IS THE PROPERTY OF MUSTANG DYNAMOMETER AND IS DELIVERED ON THE EXPRESS CONDITION THAT IT IS NOT TO BE DISCLOSED, REPRODUCED IN WHOLE OR IN PART, OR USED FOR MANUFACTURE FOR ANYONE OTHER THAN MUSTANG DYNAMOMETER WITHOUT ITS' WRITTEN CONSENT, AND THAT NO RIGHT IS GRANTED TO DISCLOSE OR DO USE ANY INFORMATION CONTAINED IN SAID DOCUMENT.
THIS RESTRICTION DOES NOT LIMIT THE RIGHT TO USE INFORMATION OBTAINED FROM ANOTHER SOURCE

REF 20019912

MUSTANG DYNAMOMETER
2300 PINNACLE PKWY., TWINSBURG, OH 44087
TELEPHONE: (330)963-5400 FAX: (330)425-3310

DO NOT SCALE DRAWING

TITLE: PIT INSTALLATION MD-250 TYPE DYNE – 20021509

DRAWN:	DATE:	APP.	DATE:	SCALE:	UNITS:
TEM	12MAR01	TEM	12MAR01	1:16	IN[MM]

SIZE:	DWG. NO.	SH	REV.
D	20021513	1 OF 1	A